本图纸为昆山福步工业设备有限公司财产，未经本单位许可不得复制或转给第三者。
This drawing is the property of FBU INDUSTRAL EQUIPMENT (KUNSHAN) CO.,LTD.unauthorized disclosure to any third party or duplication is not permitted.

接口说明 Connection	
I	隔离液入口
O	隔离液出口

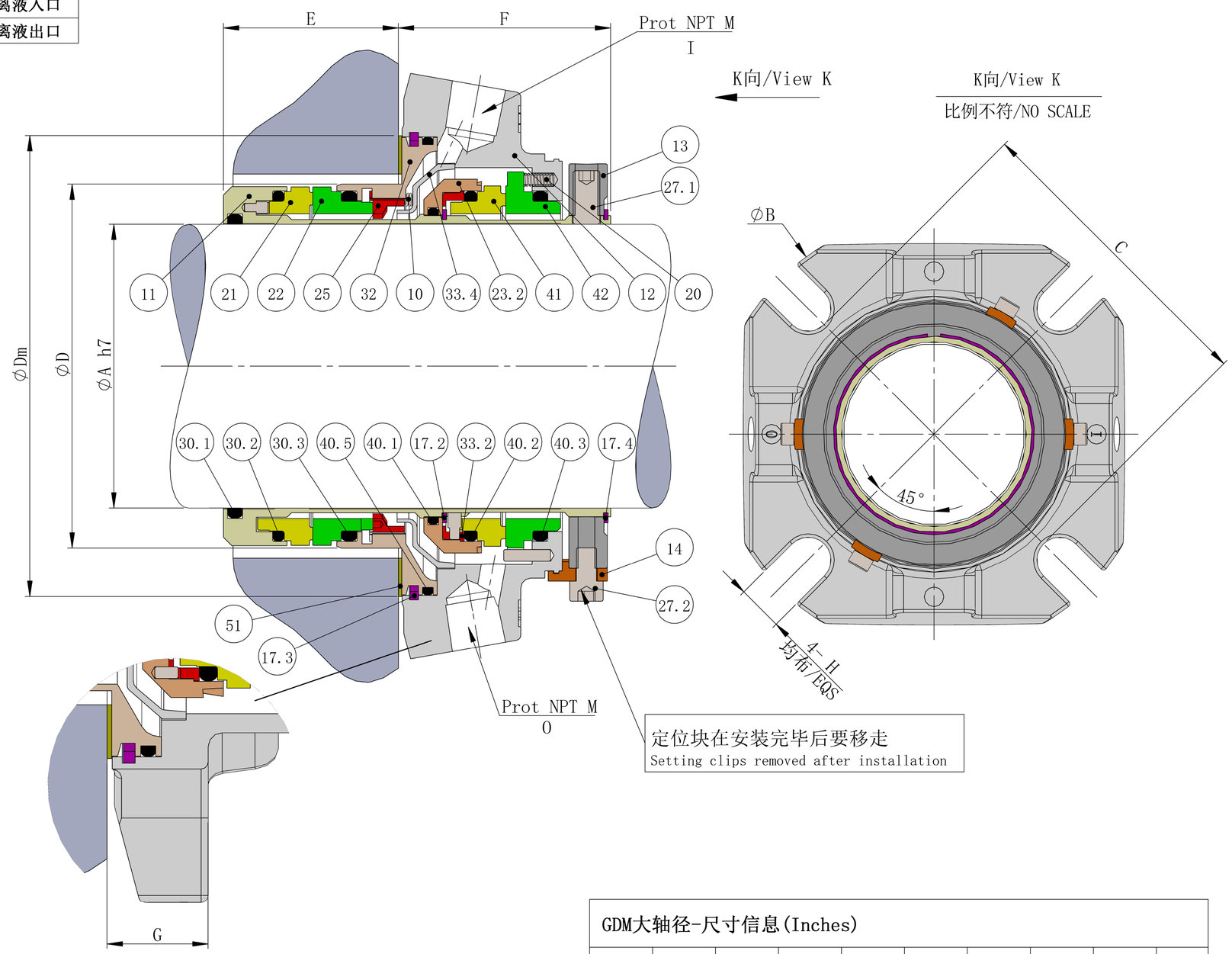

序号 No	零件名称 Description	材料 Material
11	轴套/Shaft Sleeve	316SS不锈钢/Stainless Steel
21	一级动环/Internal Rotary Face	SSIC/TC
22	一级静环/Internal Stationary Face	Carbon/SSIC/TC
25	弹簧座/Spring Plate	316SS不锈钢/Stainless Steel
32	副压盖/Gland Insert	316SS不锈钢/Stainless Steel
10	弹簧/Spring	Alloy 276
33.4	导流环/Deflector	316SS不锈钢/Stainless Steel
23.2	泵效环/Pump Ring	316SS不锈钢/Stainless Steel
41	二级动环/External Stationary Face	Carbon/SSIC/TC
12	压盖/Gland	316SS不锈钢/Stainless Steel
42	二级静环/External Rotary Face	SSIC/TC
20	弹簧/Spring	Alloy 276
13	定位环/Clamp Ring	316SS不锈钢/Stainless Steel
27.1	驱动螺钉/Drive Screw	316SS不锈钢/Stainless Steel
30.1	O型圈/O-Ring	EPR/Viton/Aflas/Kalrez
30.2	O型圈/O-Ring	EPR/Viton/Aflas/Kalrez
30.3	O型圈/O-Ring	EPR/Viton/Aflas/Kalrez
40.5	O型圈/O-Ring	EPR/Viton/Aflas/Kalrez
40.1	O型圈/O-Ring	EPR/Viton/Aflas/Kalrez
17.2	卡簧/Circlip	316SS不锈钢/Stainless Steel
33.2	二级传动环/External Drive Ring	316SS不锈钢/Stainless Steel
40.2	O型圈/O-Ring	EPR/Viton/Aflas/Kalrez
40.3	O型圈/O-Ring	EPR/Viton/Aflas/Kalrez
17.4	卡簧/Circlip	316SS不锈钢/Stainless Steel
14	定位块/Setting Clip	铜/Brass
27.2	定位螺钉/Clip Screw	316SS不锈钢/Stainless Steel
51	垫片/Gasket	非石棉/AF1
17.3	卡簧/Circlip	316SS不锈钢/Stainless Steel

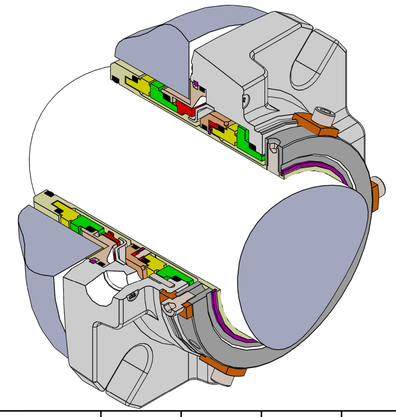

GDM大轴径-尺寸信息(mm)

A	B	C	D	Dm	E	F	G	H	M
75	189.0	131.4	101.5	125.0	50.65	69.7	25.5	17.5	3/8″
80	201.0	142.5	107.9	137.0	50.65	69.7	25.5	21.0	3/8″
85	201.0	142.5	111.0	138.0	50.65	69.7	25.5	21.0	3/8″
90	214.6	152.0	117.4	146.0	50.65	69.7	48.0	21.0	3/8″
95	214.6	152.0	119.9	147.0	50.65	69.7	48.0	21.0	3/8″
100	227.3	155.2	127.0	147.0	52.40	68	48.0	21.0	3/8″

GDM大轴径-尺寸信息(Inches)

A	B	C	D	Dm	E	F	G	H	M
2.875	7.441	5.173	3.996	4.921	1.994	2.744	1.004	0.689	3/8″
3.000	7.441	5.173	3.996	4.921	1.994	2.744	1.004	0.689	3/8″
3.125	7.913	5.610	4.248	5.394	1.994	2.744	1.004	0.827	3/8″
3.250	7.913	5.610	4.248	5.394	1.994	2.744	1.004	0.827	3/8″
3.375	7.913	5.610	4.370	5.433	1.994	2.744	1.004	0.827	3/8″
3.500	8.449	5.984	4.622	5.748	1.994	2.744	1.890	0.827	3/8″
3.625	8.449	5.984	4.622	5.748	1.994	2.744	1.890	0.827	3/8″
3.750	8.449	5.984	4.720	5.787	1.994	2.744	1.890	0.827	3/8″
3.875	8.949	6.110	5.000	5.787	2.063	2.677	1.890	0.827	3/8″
4.000	8.949	6.110	5.000	5.787	2.063	2.677	1.890	0.827	3/8″

未注公差按照 General tolerance Per ISO 2768-m	名义尺寸 Nominal dimensions [mm]	0.5-6	>6-30	>30-120	>120-400	>400-1000	>1000-2000
	公差 Tolerances [mm]	±0.1	±0.2	±0.3	±0.5	±0.8	±1.2

Format/图幅 DIN EN ISO 216 A3 | 第一视角 Projection Method 1 | 表面粗糙度表示方法符合 Method of indicating surface to ISO1302(μm) | 公差符合 Tolerances according to ISO 2768-m

标记 NO.	处数 QTY.	描述 Description	日期 Date	姓名 Name
1				
2				
3				
4				

FBU 昆山福步工业设备有限公司
FBU INDUSTRAL EQUIPMENT (KUNSHAN) CO., LTD.

	日期 Date	姓名 Name
设计 Design	2021/10/26	赵丹丹
校核 Checked		
审核 Approved		

规格型号/TYPE NO. GDM（＞70轴径）
机械密封
质量/Weight 11995.28 g

公差带 Tolerance	比例 Scale	材料标记 Matrial Code	图号/Drawing NO.	版本: Rev.
ISO 8015	1:1			A