本图纸为昆山福步工业设备有限公司财产，未经本单位许可不得复制或转给第三者。
This drawing is the property of FBU INDUSTRAL EQUIPMENT (KUNSHAN) CO.,LTD.unauthorized disclosure to any third party or duplication is not permitted.

接口说明 Connection	
I	隔离液入口
O	隔离液出口

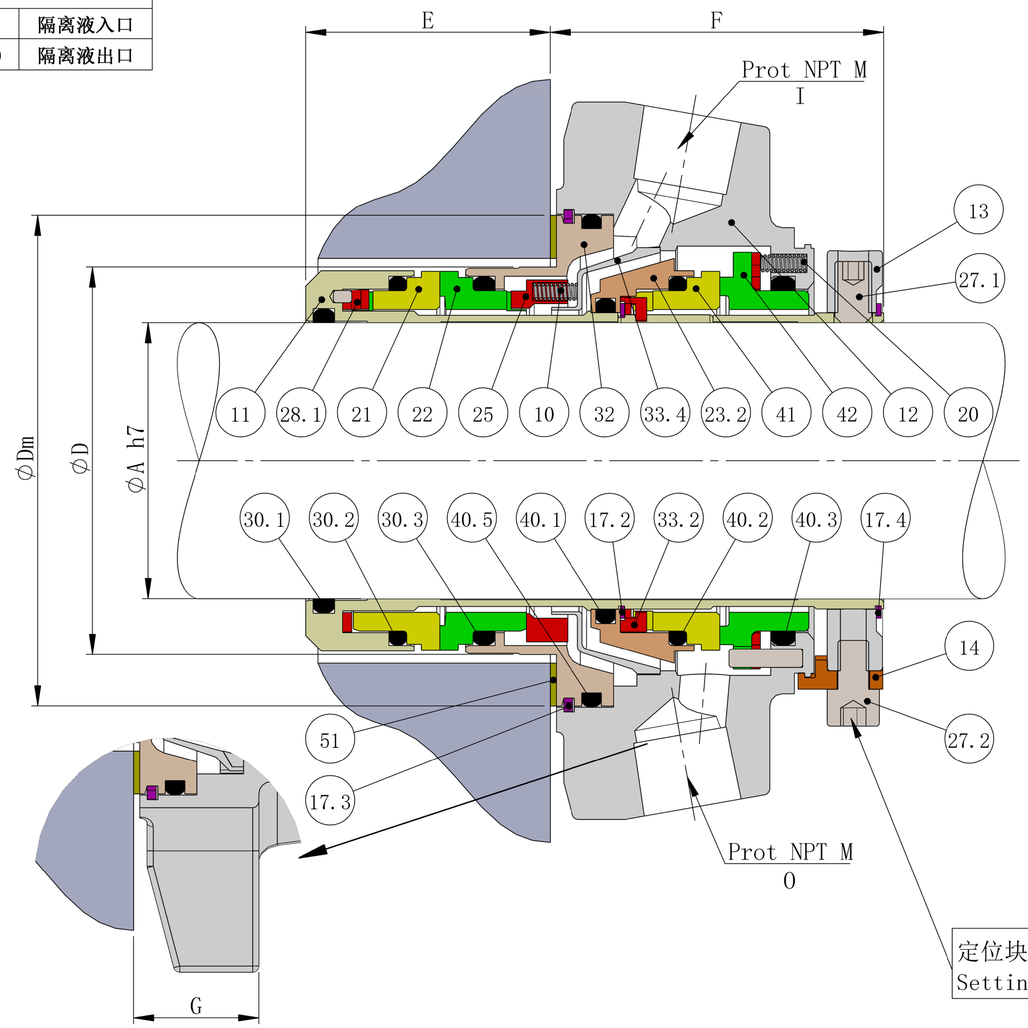

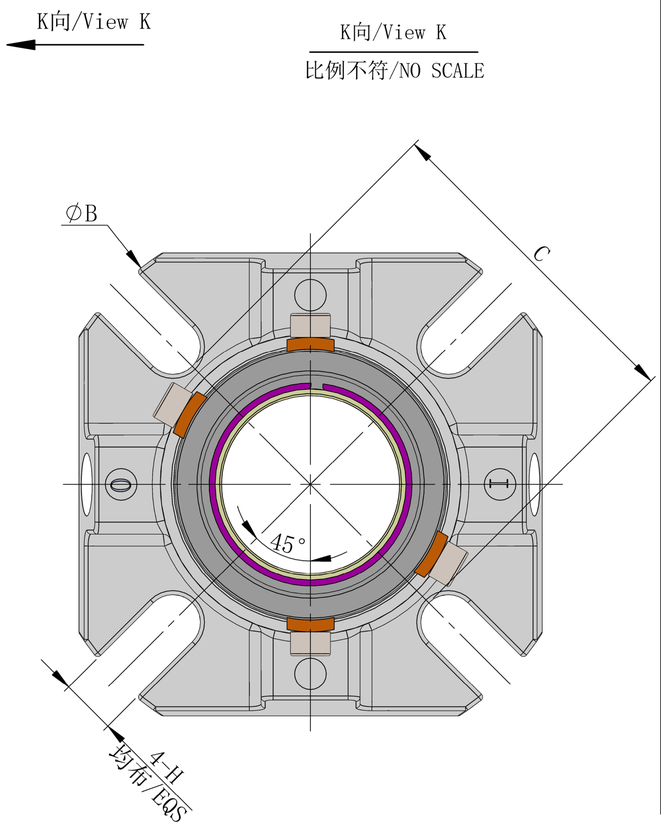

定位块在安装完毕后要移走
Setting clips removed after installation

序号 No	零件名称 Description	材料 Material
11	轴套/Shaft Sleeve	316SS不锈钢/Stainless Steel
28.1	一级传动环/Internal Drive Ring	316SS不锈钢/Stainless Steel
21	一级动环/Internal Rotary Face	SSIC/TC
22	一级静环/Internal Stationary Face	Carbon/SSIC/TC
25	弹簧座/Spring Plate	316SS不锈钢/Stainless Steel
10	弹簧/Spring	Alloy 276
32	副压盖/Gland Insert	316SS不锈钢/Stainless Steel
33.4	导流环/Deflector	316SS不锈钢/Stainless Steel
23.2	泵效环/Pump Ring	316SS不锈钢/Stainless Steel
41	二级动环/External Stationary Face	Carbon/SSIC/TC
12	压盖/Gland	316SS不锈钢/Stainless Steel
42	二级静环/External Rotary Face	SSIC/TC
20	弹簧/Spring	Alloy 276
13	定位环/Clamp Ring	316SS不锈钢/Stainless Steel
27.1	驱动螺钉/Drive Screw	316SS不锈钢/Stainless Steel
30.1	O型圈/O-Ring	EPR/Viton/Aflas/Kalrez
30.2	O型圈/O-Ring	EPR/Viton/Aflas/Kalrez
30.3	O型圈/O-Ring	EPR/Viton/Aflas/Kalrez
40.5	O型圈/O-Ring	EPR/Viton/Aflas/Kalrez
40.1	O型圈/O-Ring	EPR/Viton/Aflas/Kalrez
17.2	卡簧/Circlip	316SS不锈钢/Stainless Steel
33.2	二级传动环/External Drive Ring	316SS不锈钢/Stainless Steel
40.2	O型圈/O-Ring	EPR/Viton/Aflas/Kalrez
40.3	O型圈/O-Ring	EPR/Viton/Aflas/Kalrez
17.4	卡簧/Circlip	316SS不锈钢/Stainless Steel
14	定位块/Setting Clip	铜/Brass
27.2	定位螺钉/Clip Screw	316SS不锈钢/Stainless Steel
51	垫片/Gasket	非石棉/AF1
17.3	卡簧/Circlip	316SS不锈钢/Stainless Steel

GDM小轴径-尺寸信息(mm)

A	B	C	D	Dm	E	F	G	H	M
25	105.0	60.0	43.0	56.0	39.2	53.3	20.3	14.0	1/4″
28	105.0	66.5	46.5	58.0	39.2	53.3	20.3	14.0	1/4″
30	105.0	66.5	48.5	60.0	39.2	53.3	20.3	14.0	1/4″
32	105.0	66.5	50.6	63.0	39.2	53.3	20.3	14.0	1/4″
33	105.0	66.5	50.6	63.0	39.2	53.3	20.3	14.0	1/4″
35	120.0	68.5	52.8	65.0	39.2	53.3	20.3	14.0	1/4″
38	135.0	80.0	56.5	74.5	39.2	53.3	20.3	14.0	3/8″
40	135.0	80.0	58.0	74.5	39.2	53.3	20.3	14.0	3/8″
43	135.0	80.0	60.5	75.5	39.2	53.3	20.3	14.0	3/8″
45	139.0	84.5	63.2	80.0	39.2	53.3	20.3	14.0	3/8″
48	139.0	84.5	66.3	80.0	39.2	53.3	20.3	14.0	3/8″
50	150.0	87.5	68.75	82.0	39.2	53.3	20.3	17.5	3/8″
53	150.0	97.0	72.7	93.0	40.1	54.4	20.3	17.5	3/8″
55	150.0	97.0	72.7	93.0	40.1	54.4	20.3	17.5	3/8″
60	164.5	102.4	78.6	98.5	40.1	54.4	20.3	17.5	3/8″
63	171.0	108.0	81.0	100.0	40.1	54.4	20.3	17.5	3/8″
65	171.0	108.0	85.4	104.0	40.1	54.4	20.3	17.5	3/8″
70	180.0	112.0	88.6	107.0	40.1	54.4	20.3	17.5	3/8″

GDM小轴径-尺寸信息(Inches)

A	B	C	D	Dm	E	F	G	H	M
1.000	4.134	2.362	1.693	2.205	1.543	2.098	0.799	0.551	1/4″
1.125	4.134	2.618	1.831	2.283	1.543	2.098	0.799	0.551	1/4″
1.250	4.134	2.618	1.992	2.480	1.543	2.098	0.799	0.551	1/4″
1.375	4.724	2.697	1.992	2.559	1.555	2.047	0.787	0.551	1/4″
1.500	5.315	3.150	2.224	2.933	1.543	2.098	0.799	0.551	3/8″
1.750	5.472	3.327	2.488	3.150	1.543	2.098	0.799	0.551	3/8″
1.875	5.472	3.327	2.610	3.150	1.543	2.098	0.799	0.551	3/8″
2.000	5.906	3.445	2.707	3.228	1.583	2.059	3.574	0.689	3/8″
2.125	5.906	3.819	2.862	3.661	1.579	2.142	0.799	0.689	3/8″
2.375	6.476	4.031	3.094	3.878	1.579	2.142	0.799	0.689	3/8″
2.500	6.732	4.252	3.189	3.937	1.579	2.142	0.799	0.689	3/8″
2.625	6.732	4.252	3.362	4.094	1.579	2.142	0.799	0.689	3/8″
2.750	7.087	4.409	3.488	4.213	1.579	2.142	0.799	0.689	3/8″

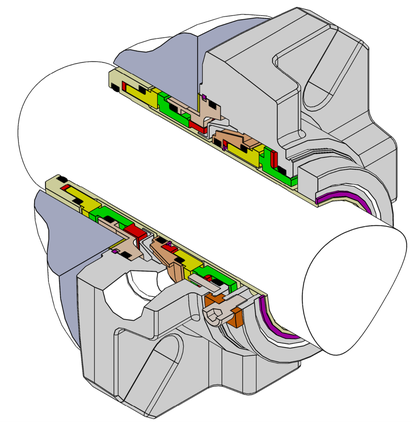

未注公差按照 General tolerance Per ISO 2768-m	名义尺寸 Nominal dimensions [mm]	0.5-6	>6-30	>30-120	>120-400	>400-1000	>1000-2000
	公差 Tolerances [mm]	±0.1	±0.2	±0.3	±0.5	±0.8	±1.2

Format/图幅 DIN EN ISO 216 A3 | 第一视角 Projection Method 1 | 表面粗糙度表示方法符合 Method of indicating surface to ISO1302(μm) | 公差符合 Tolerances according to ISO 2768-m

标记 NO.	处数 QTY	描述 Description	日期 Date	姓名 Name
1				
2				
3				
4				

昆山福步工业设备有限公司
FBU INDUSTRAL EQUIPMENT (KUNSHAN) CO., LTD.

	日期 Date	姓名 Name
设计 Design	2021/9/2	赵丹丹
校核 Checked		
审核 Approved		
公差带 Tolerance ISO 8015	比例 Scale 1:1	材料标记 Matrial Code

规格型号/TYPE NO. GDM（≤70轴径）
机械密封
质量/Weight 4073.14 g
图号/Drawing NO.
版本: Rev. A